98 TOYOTA 4RUNNER* E-LOCKER RETROFIT WIRING DIAGRAM

USING FACTORY REAR DIFF LOCK CONTROL SWITCH, 4WD ECU & REAR DIFF LOCK WIRING HARNESS

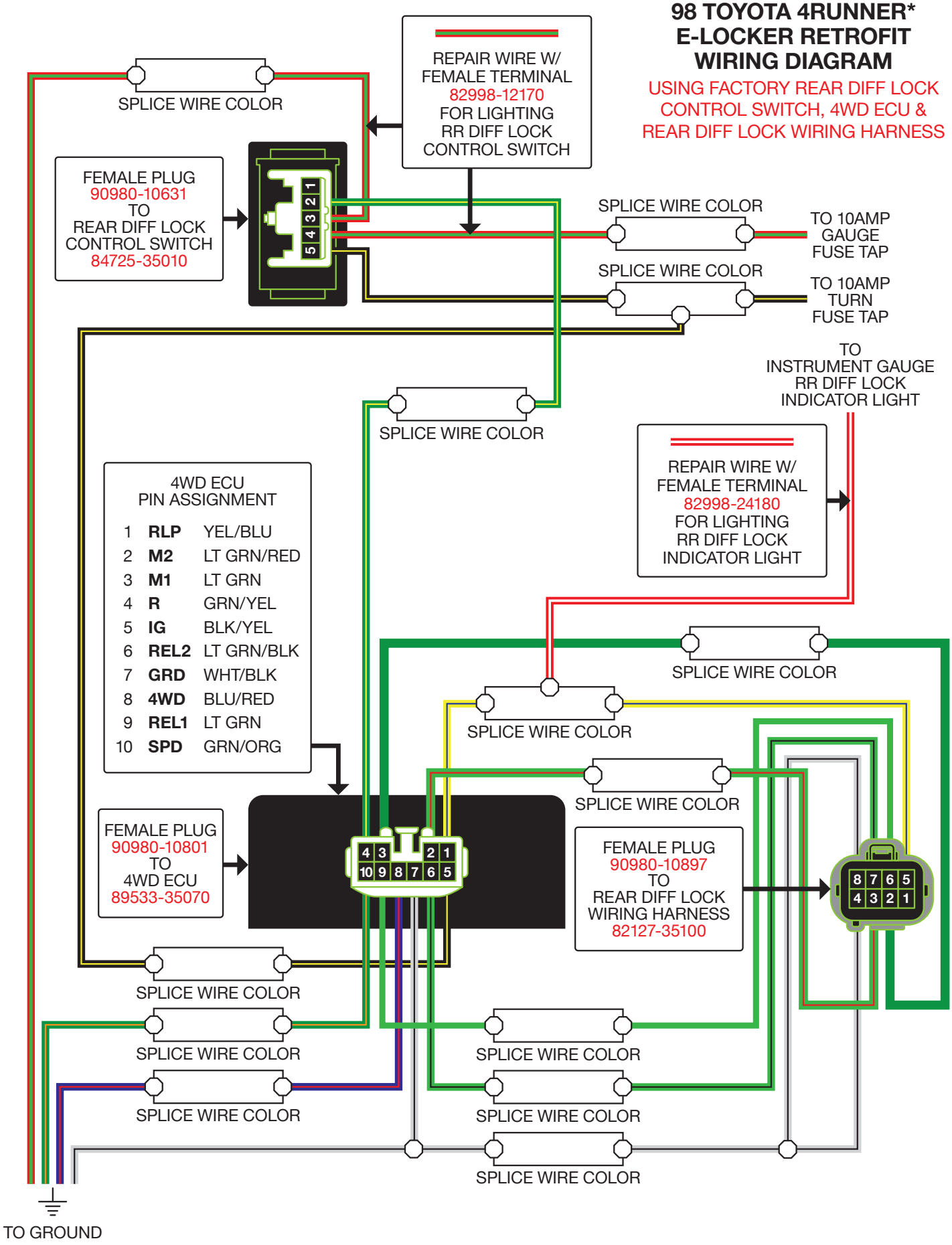

COPYRIGHT © 2013 CHRISTY KINTZEL

***SR5, V6, AUTO, A.D.D., W/O 2-4 SELECT SWITCH**