AC0C6–03
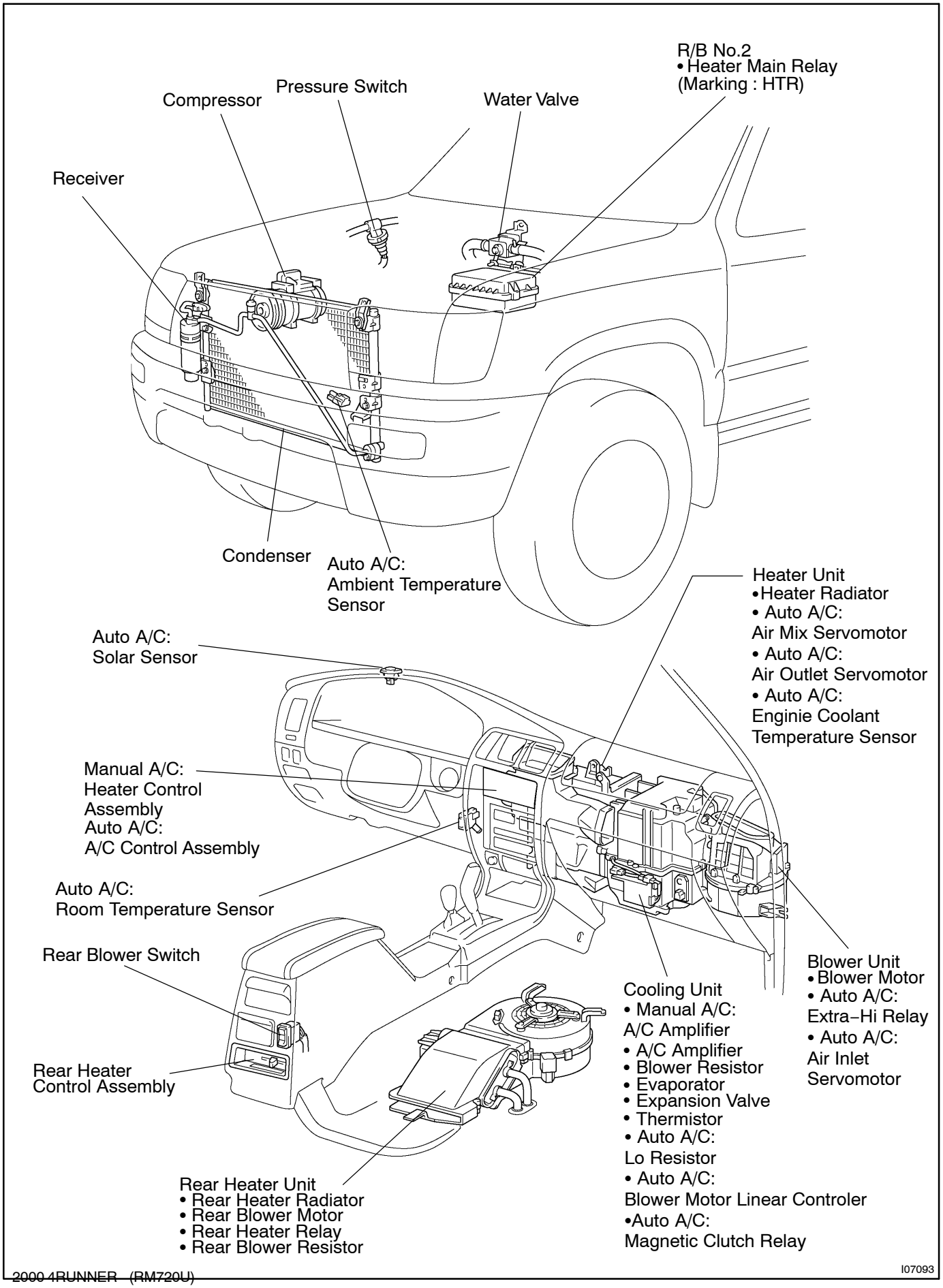
LOCATION